Student Name: _____

Student ID# _____

	Check which tutorial for pick-up
T01 Monday mornings	
T02 Tuesday afternoons	

CHEMICAL ENGINEERING 2O04
Midterm #1

Duration 120 minutes (7:00pm – 9:00pm) **D.R. Latulippe**
McMaster University Term Test **Wednesday February 26th, 2025**

SPECIAL INSTRUCTIONS

1. The test includes 6 questions; ensure your copy of the test is complete.
2. Marks for each problem are given (**Total of 40 marks)**. Use this as a time-management guide; for example: $4\,marks\left(\frac{120\,minutes}{40\,marks}\right) \sim 12\,minutes$
3. The following materials are permitted during this examination:
   a) The Fox and McDonald's Introduction to Fluid Mechanics textbook (any edition and any version)
   b) Any printed notes or hand-written notes
   c) A tablet or computer in "airplane mode" with a document reader (e.g. Adobe Acrobat, Microsoft OneNote) open to review course material. **<u>Any student caught with a device not in airplane mode and/or with other applications opened will automatically receive a grade of 0 on the test.</u>**
   d) The McMaster Standard Calculator (Casio FX-991MS/MS+)
4. **The following materials are NOT permitted during this examination:**
   a) The internet.
   b) Any calculation software (e.g. Excel, MATLAB).
   c) Any applications to communicate with anyone.
5. Only tests written in pen will be considered if re-marking is requested (addition errors excepted).
6. **On page 10, we have given you a table with some useful conversion factors.**

For grading purposes only

Q1	Q2	Q3	Q4	Q5	Q6	TOTAL

QUESTION 1 (8 MARKS)

Answer the following short questions in the space provided:

a.	The angular velocity profile of the fluid in the gap between the stationary inner cylinder (of radius R_1) and rotating outer cyliner (of radius R_2) is proposed to be of the following form: 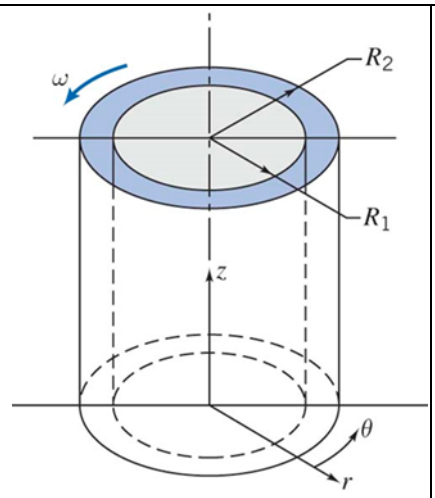 $$v_\theta = \frac{\omega R_1}{1-\left(\frac{R_1}{R_2}\right)^2}\left[\frac{r}{R_1}-\frac{R_1}{r}\right]$$ Prove/disprove that the equation above satisfies the 'no-slip' boundary condition for the inner stationary cylinder. **(2 marks)**	
b.	In tutorial #1, we gave you the Darcy-Weisbach Equation: $$h_l = f\,\frac{L}{D}\frac{V_{avg}^2}{2}$$ where f is the friction factor (a dimensionless number), L is the pipe length (m), D is the pipe diameter (m), and V_{avg} is the average fluid velocity (m/s). Prove that the answer with SI units of m^2/s^2 correctly represent the SI units for specific energy. **(1 mark)**	
c.	Give a brief explanation of the wetting behavior that occurs when a small drop of ethanol is placed on a perfectly smooth piece of polypropylene. Provide a justification for your answer. **(2 marks)**	

d.	Describe the difference between a Venturi meter and a rotameter in terms of their ability to be used for automated control in any piping system. **(1 mark)**	
e.	Describe the difference between a Venturi meter and a rotameter in terms of their orientation (i.e. horizontal, vertical) when used in any piping system. **(1 mark)**	
f.	For pressure driven flow of a liquid in a circular pipe, give the correct relationship between maximum axial velocity and average axial velocity for both laminar and turbulent flow conditions. **(1 mark)**	

QUESTION 2 (5 MARKS)

The North Atlantic right whale is one of the world's most endangered large whale species – a severe threat to their existence is the traditional practice of fishing for lobster by placing a cage on the bottom that is connected to a buoy on the surface via a long rope – whales (and other sea life) will often get entangled in those long ropes. One alternative approach to addressing the entanglement problem is ropeless fishing - as shown in the accompanying figure, one approach being developed is "variable buoyancy" traps which are negatively buoyant (i.e., they sink to the ocean floor) when they are deployed, but then upon receiving an acoustic command from the fishing vessel a compressed air cylinder will fill an inflatable bag to make the trap positively buoyant and it floats to the surface.

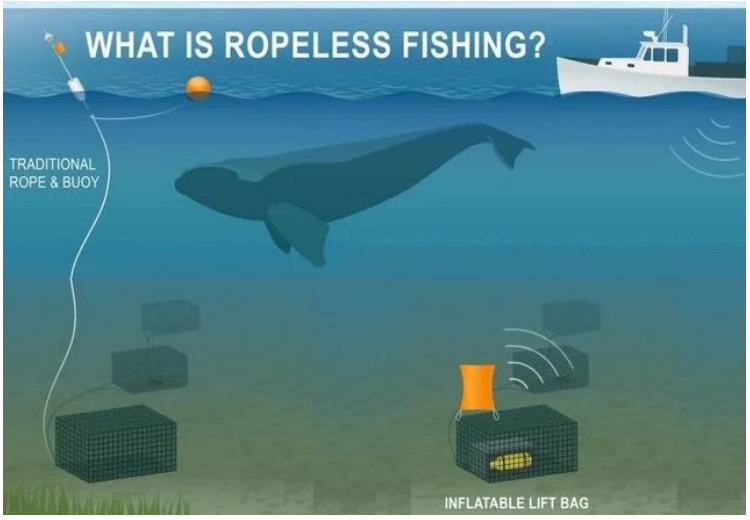

Some important information:

- a modern-day lobster traps constructed from coated wire mesh weighs approximately 18 kg
- compressed air cylinder is 15 cm in diameter, 45 cm in length, and weighs 14 kg

Using the design principle of inflating the bag 20% more than the minimum amount required to achieve positive buoyancy, calculate the volume that the bag should be inflated to when it receives the acoustic command.

QUESTION 3 (4 MARKS)

Consider ethanol at 20 ^{o}C flowing through a venturi meter in which the ratio of the 'throat' diameter to 'upstream' diameter is 0.5. If the absolute pressure at the 'throat' of the venturi meter is 34 psi lower than the absolute pressure immediately upstream of the venturi meter, calculate the average velocity of ethanol in the 'throat' section of the venturi meter.

QUESTION 4 (7 MARKS)

For the given heights on the differential manometer, determine the pressure difference (kPa) between the two pipes that are used to transport water and glycerin. All the liquids are at room temperature (i.e. 20 ^{o}C).

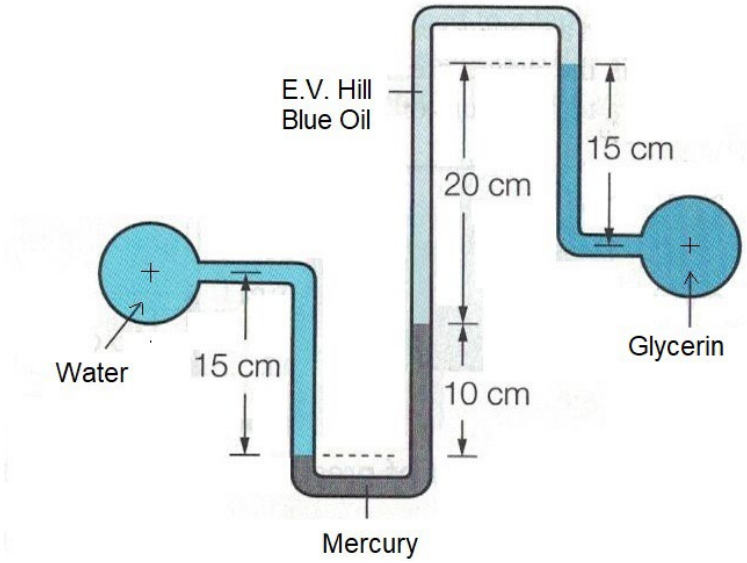

QUESTION 5 (11 MARKS)

As shown in the accompanying figure, a triangular trough (with length L, height H, and half-width W) is being filled with a liquid via a single inlet source of constant flow rate.

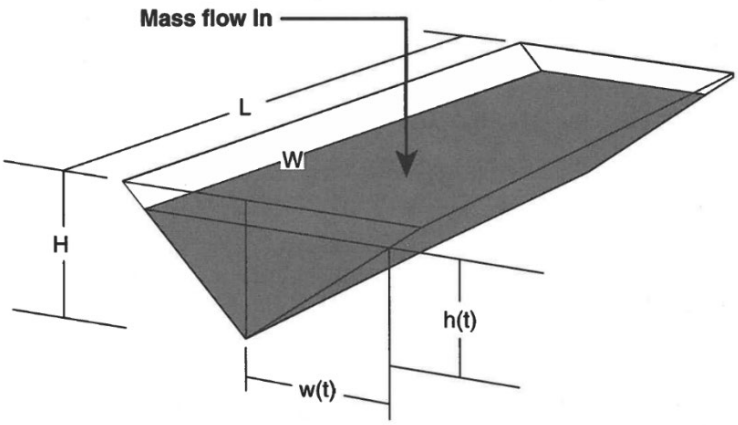

a. Starting from a general mass balance equation for the triangular trough, derive the appropriate equation for the change in liquid level (dh_{trough}/dt).

HINT: The formula for volume of liquid in the triangular trough is $\forall = whL$

(7 marks)

b. Solve the differential equation from part a (using the additional condition that the trough is initially empty) to get the correct expression for the liquid level in the triangular trough as a function of time (i.e. $h_{trough}(t)$).

(4 marks)

QUESTION 6 (5 MARKS)

Given the viscosity and temperature data for SAE 15W-40 engine oil in the table below, calculate the temperature (K) at which the viscosity of SAE 15W-40 engine oil is equal to 30% of its value at 303 K.

Temperature (K)	Viscosity (Pa·s)
283	0.583
303	0.155

Table G.2

Conversion Factors and Definitions

Fundamental Dimension	English Unit	Exact SI Value	Approximate SI Value
Length	1 in.	0.0254 m	—
Mass	1 lbm	0.453 592 37 kg	0.454 kg
Temperature	1°F	5/9 K	—

Definitions:

Acceleration of gravity:	$g = 9.8066\ \text{m/s}^2$ ($= 32.174\ \text{ft/s}^2$)
Energy:	Btu (British thermal unit) ≡ amount of energy required to raise the temperature of 1 lbm of water 1°F (1 Btu = 778.2 ft · lbf)
	kilocalorie ≡ amount of energy required to raise the temperature of 1 kg of water 1 K(1 kcal = 4187 J)
Length:	1 mile = 5280 ft; 1 nautical mile = 6076.1 ft = 1852 m (exact)
Power:	1 horsepower ≡ 550 ft · lbf/s
Pressure:	1 bar ≡ 10^5 Pa
Temperature:	degree Fahrenheit, $T_F = \frac{9}{5}T_C + 32$ (where T_C is degrees Celsius)
	degree Rankine, $T_R = T_F + 459.67$
	Kelvin, $T_K = T_C + 273.15$ (exact)
Viscosity:	1 Poise ≡ 0.1 kg/(m · s)
	1 Stoke ≡ 0.0001 m^2/s
Volume:	1 gal ≡ 231 in.^3 (1 ft^3 = 7.48 gal)

Useful Conversion Factors:

Length:	1 ft = 0.3048 m	Power:	1 hp = 745.7 W
	1 in. = 25.4 mm		1 ft · lbf/s = 1.356 W
Mass:	1 lbm = 0.4536 kg		1 Btu/hr = 0.2931 W
	1 slug = 14.59 kg	Area	1 ft^2 = 0.0929 m^2
Force:	1 lbf = 4.448 N		1 acre = 4047 m^2
	1 kgf = 9.807 N	Volume:	1 ft^3 = 0.02832 m^3
Velocity:	1 ft/s = 0.3048 m/s		1 gal (US) = 0.003785 m^3
	1 ft/s = 15/22 mph		1 gal (US) = 3.785 L
	1 mph = 0.447 m/s	Volume flow rate:	1 ft^3/s = 0.02832 m^3/s
Pressure:	1 psi = 6.895 kPa		1 gpm = 6.309×10^{-5} m^3/s
	1 lbf/ft^2 = 47.88 Pa	Viscosity (dynamic)	1 $\text{lbf} \cdot \text{s/ft}^2$ = 47.88 $\text{N} \cdot \text{s/m}^2$
	1 atm = 101.3 kPa		1 $\text{g/(cm} \cdot \text{s)}$ = 0.1 $\text{N} \cdot \text{s/m}^2$
	1 atm = 14.7 psi		1 Poise = 0.1 $\text{N} \cdot \text{s/m}^2$
	1 in. Hg = 3.386 kPa	Viscosity (kinematic)	1 ft^2/s = 0.0929 m^2/s
	1 mm Hg = 133.3 Pa		1 Stoke = 0.0001 m^2/s
Energy:	1 Btu = 1.055 kJ		
	1 ft · lbf = 1.356 J		
	1 cal = 4.187 J		

THE END